THE ASSEMBLY MANUAL

The roof and cladding templates **EUREKO DDS II**, imitating the appearance of wooden shingle.

The roofing EUREKO DDS II, is an improved second version of the plastic shingle. It is placed from minimum slope 25 for groundwork, air-dry formwork or for OSB boards, always with placed quality hydro-insulating foil. The applied foil type depends on the composition of the roof cladding.

The line measuring

Each line of shingles is nailed on two slats of axial distance 21 If you place the full roof surface in the slats at this distance, the recommended roof slope is 35. If the assembly is required at lower slope (higher) or during the line measuring in order to fit the full line in the ridge as follows:
The first **fixed and unchanging** distance is 21 cm. (it is the distance of the fixing locations on the templates).
The second **optional** distance of the slats is between the lines and specifies the overlapping. Prior to its reduction to 18 cm, increase the template overlapping for the roofing use to minimum roof slope 25.
The distance can be higher for the slope over 35 (to maximum 25 cm for cladding vertical walls), which can result in the same distance of the lines up to the ridge.

Example of the slat measuring

1. Select suitable overlapping of the shingle in the gutter, approximately 6 cm, and attach the shingle to indicate two slats of the first line. See figure 3.

2. The last slat will be distanced from the ridge at approximately 21 cm, fig. 2.

3. Measure the distance to the ridge from the lower edge of the first line, including the contra-slats!
We measured e.g. 670 cm.
Deduct 21 cm (last slat from the ridge) 670 - 21 = 649 cm
The number of lines is 15. 649 : 15 = 43.3 cm - (i.e. distance of the lines)
We deduct the first fixed distance: 43.3 - 21 = 22.3 cm
The result is the second optional distance of the slats i.e. 22.3 cm
The first distance is known and the same, 21 cm.

Overlapping the lines 5.5 cm resulting from the measuring is suitable for the roof slope approx 45°

The counter-slat is recommended to be divided in two parts from boards of approximately 2 cm strength, see figure 1. The lower slat is nailed directly to the roof frame or the formwork. At this stage, attach the foil and secure it with the second board. It forms a bath and potential moisture does not flow down to the nails in the contra-slats.

Fig. 1

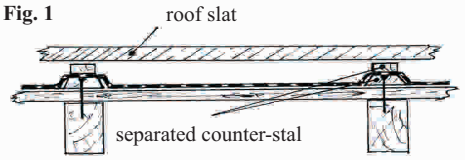

Fig. 2

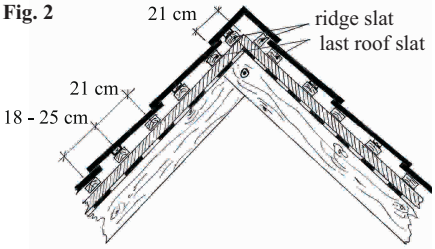

Fig. 3

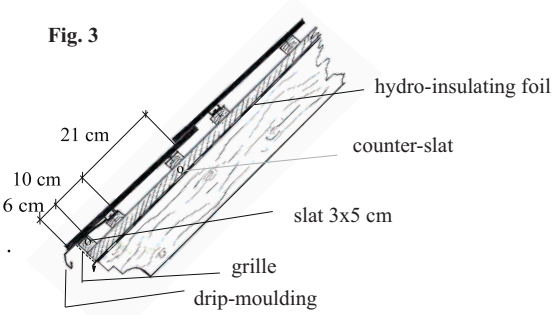

The shingle in the first line by the gutter must be supported with a slat approximately 3x5xcm (it depends on the dimension of the applied slats.) It is suitable to support the template with the gutter sheet metal and use more nails for attachment for better water drainage in the gutter and especially in mountain areas with common formation of icicles. 3.
Now we can commence the shingle placement with the assembly advantage from top to bottom which increases the work safety. We perform the placement from left to the right 3 - 4 lines at the same time with side shingle overlapping in lines on the top of each other by approximately 1/2 of the shingle width. It is suitable to open more packages at the same time and mix individual shingles in order to place potential colour differences on the roof randomly.
The templates during the assembly are inserted in the upper lock and then clipped in the lower lock. Use two ideally copper nails 2.8 x 32 mm for nailing into the indicated openings in the template. It is important to create dilatation gaps in the dewatering groove to enable the template stretching in the gaps during temperatures up to 80 C. On the other hand during placement of warm templates in the summer, create small dilatation gaps. After the shingle placement at the ridge, place again 3 – 4 lines by shifting the upper line under the shingle already supported. Proceed this way to the gutter and it eliminates the necessity to walk on the roofing. The ridge tiles corresponding to the slope of your roof can be ordered or made from flat template as follows: Using a saw with fine teeth to cut V shape ribbing at the middle bottom part of the template. Carefully heat the template in this location using hot air gun until the plastic material becomes softer and bend it in the corresponding roof angle. Secure the bending and leave to cool. During the assembly, attach the ridge tile on the roof ridge in such way the template end is supported with a slat by 1.5 cm higher than the strength of used slats. (fig. 2). Water groove in the cutting location is secured with applied silicone putty (approximately 1 cm3), with other roof tile pressed in.
The corners and valley are supported with conic shingles 60 cm long. The shingle has the lock parts longer and they can be adjusted as required by a saw depending on the template turning angle. Additionally, the conic shingle includes a sliding lock at the bottom side created by breaking off the pressed part from the template side and inserting it to the prepared tenon. After placing the template, turn it by 90. Detailed manual is provided on the next page.

During the assembly, adhere to the principles below:

1. Never use nails with diameter over 2.8 mm!
2. Never fasten the nails to tight for the option of free template movement during dilatation!
3. During the assembly, pay attention to the observing the dilatation joint in the dewatering groove approximately 1.5 mm depending on the template temperature during placement!The lower the temperature during placement the greater the dilatation gap and vice versa!
4. If you require to fit the template outside the designed location, use the wood screw (suitable dimension is 3.5 x 50 mm - stainless) directly over
the template into the slat and secure it with the silicone putty of identical colour. The maximum of 2-3 templates are connected using this method!

THE ASSEMBLY MANUAL

The roof and cladding templates **EUREKO DDS II**, imitating the appearance of wooden shingle.

Dimensioning and assembly of the shingles in the corners.

The line lengths in the corner are extended, (the lower roof sloping, the longer the corner), therefore we must measure the line distance in our case. The distance must not exceed 53 cm! If the distance is greater, it is necessary to specify where the auxiliary line is placed in the corner. One or more to enable us to observe the maximum distance 53 cm (see figure 1). It is also possible to have a different number of lines on each roof side, if the roof levels have a different slope. It is also necessary to specify where the line is to be fading and where doubling.

The corner assembly.

Cut the slats in contact with the corner in a mild arch. Terminate the placement of flat templates approximately 60 cm from the corner (measured at the template lower edge, depending on the roof slope) and commence the conic template treatment. Break off a part with the opening in the first line where the shingle is nailed and insert it in the prepared the tenon on the template lower side parallel with the longer side. The tenons with small diameters are auxiliary; they are used solely for storage and transport. Now you can break it off.
Then place the shingle to the last flat template and write down the left lock location for shortening from the top view. Considering the templates start winding, it is necessary to check the flatness and continual line turning over the corner to the adjacent side. The shingles cannot be nailed yet, they require laying to the corner in such way the shingle was approximately parallel in the corner axis. This can be achieved by adding or removing flat templates. (i.e. the distance 60 cm from the). If your shingles are prepared this way, and you are satisfied with the turning diameter, it is possible to start nailing.
Insert the shingle in the left lock, turn the lower lock by 90° under the previous shingle, and nail it. Pay attention to the nail fastening because an arch is formed on the corner creating a lever in the nailing locations, which displaces the template! (adjust in the nailing location by means of chisel, saw or rasp.) The first conic shingles are long, reaching above the upper line, and they require shortening. The line keeps extending towards the corner, and the shortening is no longer required.
If the shingles are nailed to the corner, we place the directly treated templates further to the adjacent side, providing we need to shorten the lock on the right template side in order to observe the line flatness and maintain the left lock function. We place the shingles until the dewatering groove is perpendicular to the slats. Continue further with placing the flat templates.
In case the lines keep shortening, doubling or adding, it is necessary to add auxiliary slats under the line in the template nailing location, which should ideally be screwed in the existing slats. In case of faded line, the templates keep shortening until they disappear, on the contrary, if it is required to turn one line into two, a new line gradually comes out under the line. In some cases, the angle of the conic shingles may not be sufficient, which means the shingles in the upper part need to be more narrow. This can be achieved by cutting the template according to the lower inclined ribbing. We also need to remove the reinforcement parts in the ribbing locations, which represent an obstacle upon placing on the second shingle. The solution is not perfect and we must try to avoid it.
In order to provide a perfect function of the corner, it is suitable to place a safety foil on the slats, identically to the valley assembly. The templates are then nailed to the slats over the foil, and they lead to the lower line in each second line.

Fig. 1

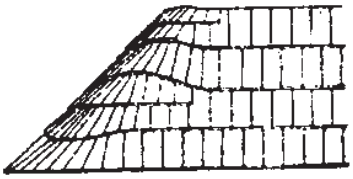

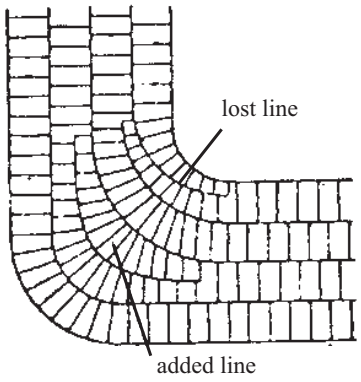

Metalwork elements:

Considering a long service life of the plastic roofing, the sheeting is suitable from copper sheet metal.
Leeward strap:
The leeward strat should be prepared from two parts A and B. (figure 2)
At first dismantle the part A. after placing the shingle at part A close it with part B, and nail it with copper nails. This ensures the shingle ends by the slat are inserted under the part B which provides their mechanical fixation.

Other sheeting is common. We only recommend keeping the part of sheeting with reverse bending under the roofing under 5 cm in width.

Fig. 2

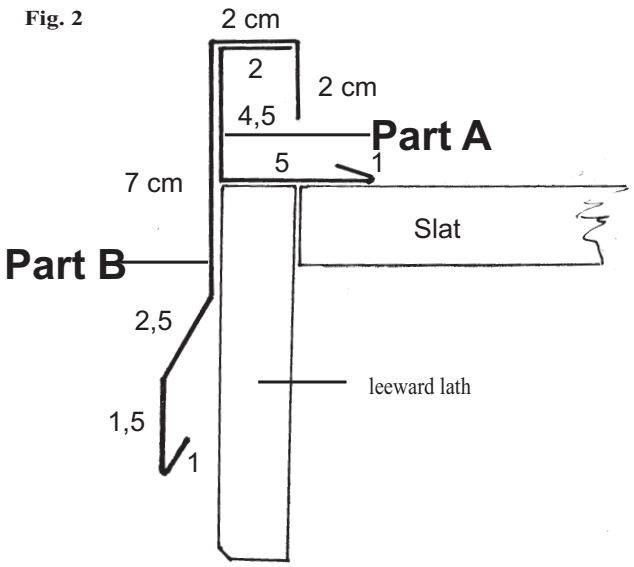

THE ASSEMBLY MANUAL

The roof and cladding templates **EUREKO DDS II**, imitating the appearance of wooden shingle.

Dimensioning and assembly of the shingles in the valley.

The valley is a location with high water flow and possible filling of the dewatering grooves. We need to pay a great attention to the valley assembly! Figure 1 displays a recommended method for the valley completion. Start by pacing the diffusion foil strips (1) parallel with the valley. Secure it with counter-slats (2) fixed parallel with the valley at 30 cm distance from the valley centre. Now place the diffusion foil strip (3) parallel with the gutter in order to overlap to the adjacent roof level with overlapping the already nailed counter-slats (2). Shape the foil in such way to prevent excessive stretching and create a room for rainwater discharge. During the counter-slat assembly in this location, it is necessary to insert a butyl rubber self adhesive strip to seal the foil nailing puncture. Now we can perform the boarding. Pay attention to the slat length in the valley to prevent the foil breaking in case of possible slat bending! According to figure 1, prepare the boards (4) for the valley reinforcement. Do not forget to impregnate the boards, and ideally screw them in the existing slats. (monitor the wood screw length.)

Measuring the lines in the valley.

Identically to corner measuring, measure the valley length and divide by the number of lines. The calculated line distance in the valley must not exceed 53 cm. If the line distance is greater, it is necessary to insert auxiliary placement line in the valley, one or more, or double the line in such way to adhere to the 53 cm distance. (see Fig. 2). It is also possible to have a different number of lines on each roof side, if the roof levels have a different slope. It is also necessary to pre-specify where the line is to be fading and where doubling.

Fig. 1

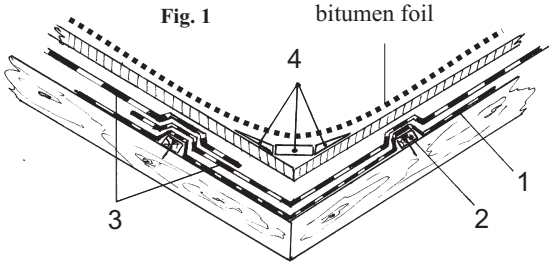

The assembly of the shingles in the valley.

After measuring the valley, commence with the assembly. Place the bitumen foil strips in the valley on the slats at 1 m length from the valley centre. (fig. 1) The shingles are then nailed to the slats over the foil, and they lead to the upper side of the lower line under each second to fourth line. Terminate the placement of flat templates approximately 30 cm from the valley centre (measured at the template lower edge) and commence the conic template treatment. Break off a part with the opening in the first line where the shingle is nailed and insert it in the prepared the tenon on the template lower side parallel with the longer side. The tenons with small diameters are auxiliary; they are used solely for storage and transport. Now you can break it off.

Then place the shingle to the last flat template and write down the left lock location for shortening from the top view. At the same time shorten the dewatering groove adequately in the right lower part of the template depending on the template turning, the line level, and arch continuity. The shortening is performed solely to prevent water outlet from the groove with sufficient overlapping to the lower line! The templates should not be nailed at this point; just level it to the valley axis. The shingle should be parallel with the valley axis. This can be achieved by adding or removing flat templates (i.e. the 30 cm distance from the valley, see above)

If the templates are prepared this way and we are satisfied with the level and the line turning diameter (ideally check the line from greater distance, ideally from the ground), we can commence with the template nailing. Insert the shingle in the left lock, turn the lower lock by 90° under the previous template, and nail it.

The first conic shingles are longer, reaching above the upper line, and they require shortening. The line keeps turning towards the valley and extending, and the shortening is no longer required. If the line is nailed to the valley centre, keep placing on the roof adjacent side providing the left lock keeps shortening. We place the templates until the dewatering groove is perpendicular to the slats. Keep placing the flat templates.

In case the lines keep fading or doubling, it is necessary to add short auxiliary slats under the line part in the template nailing location, which should ideally be screwed in the counter-slats and the existing slats.

Considering ice freezing in the valley, the templates are more loaded and they may be pulled out. It is therefore necessary to use free openings for the nails and nail each template with 3-4 nails.

Fig. 2

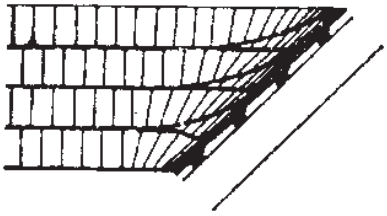

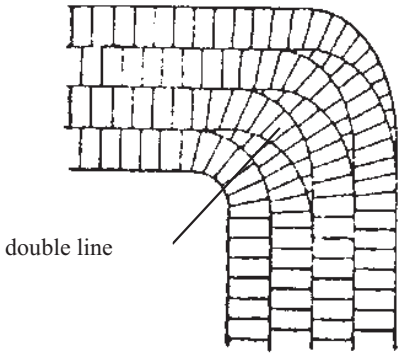

Roof ventilation.

The roof ventilation can be provided by delivered ventilation elements. It is more suitable to create small 'eyebrows' in the last line or the line before last by the ridge. Such ventilation forms a natural element of shingle roofing. One ventilation of the above type includes 80 cm2 surface, which can be extended by the eyebrow expansion. The required number of ventilation is specified as per the roof project.

The ventilation assembly

Measure the centres of the 'eyebrows' to the slats. Cut 45 cm continual arch of the 'eyebrow' shape from the slat waste. Attach the arch to the lower slat line designed for ventilation. Now three lines can be assembled at the same time from the left. Place the lower line in the ventilation location; attach the safety ventilation grid (i.e. fingers) by means of screws on the upper line edge at 0.5 m length. At this moment, we can place the line with the 'eyebrow', and shorten or shift the protruding 'fingers' under the shingle. In case of extensive template bending on the 'eyebrow', use hot air gun. (double line)